SYMBOL DEFINITION

A DIMENSION WITHOUT AN INSPECTION REPORT SYMBOL DOES NOT REQUIRE INSPECTION. IT MAY BE CONTROLLED ON THE INDIVIDUAL COMPONENT DRAWING.

TOTAL NO. OF INSPECTIONS REQUIRED 15

LAST NO. USED 5

MISSING SYMBOLS

NO MISSING SYMBOL NUMBER

DR	DATE	CHK	DATE	APP	DATE	REVISION HISTORY		SIZE	APPROVED
GR	2/5	H	25	-	-	CLEANED REV COLUMN & ADDRAWN	D PD	25-5-02	KJK KJK JK

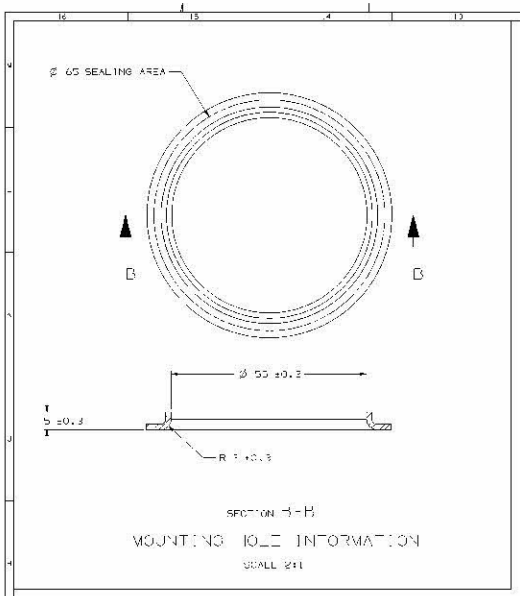

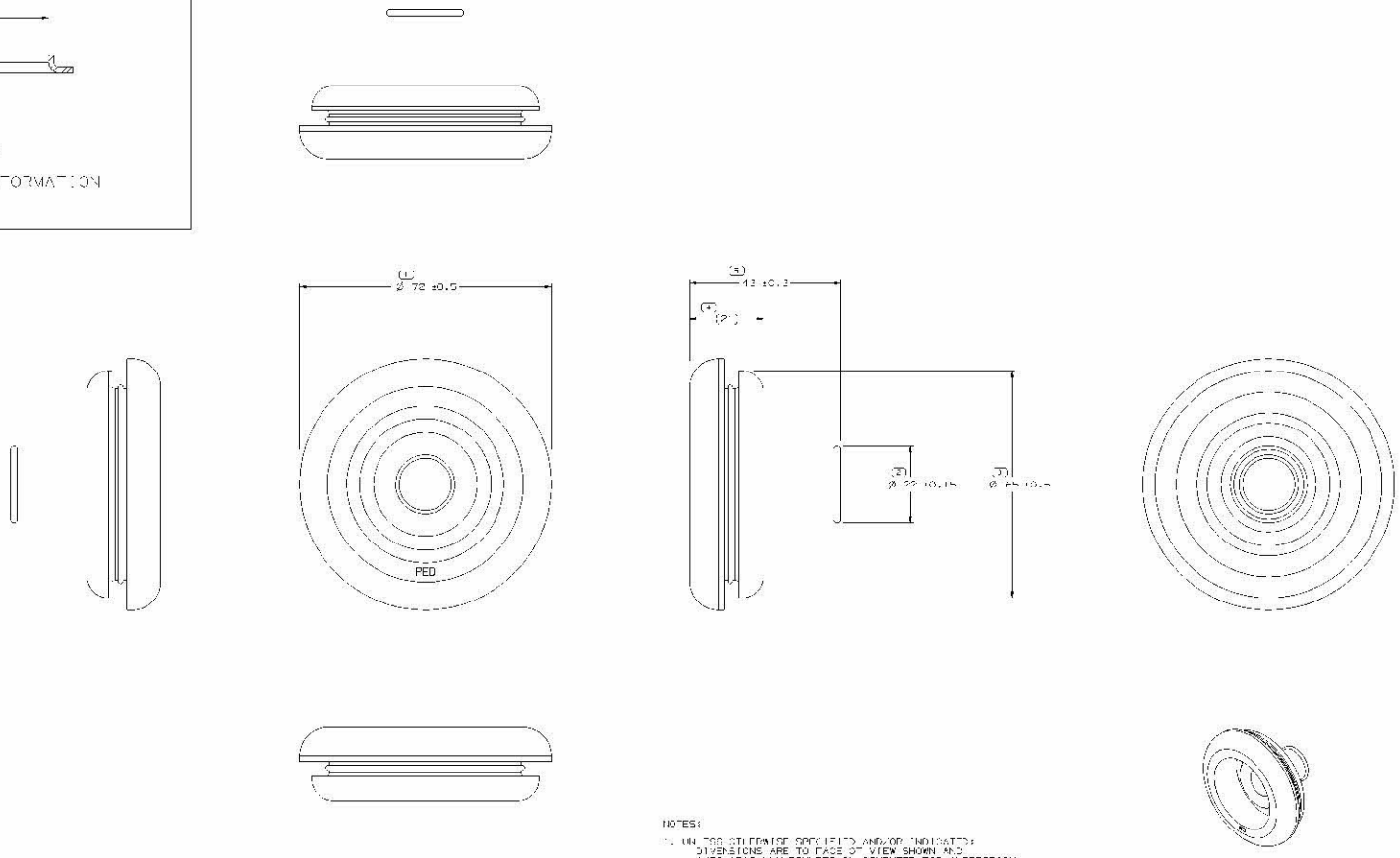

NOTES:

1. UNLESS OTHERWISE SPECIFIED AND/OR INDICATED:
   DIMENSIONS ARE TO BASE OF VIEW SHOWN AND AUTOMATICALLY ROUNDED BY COMPUTER FOR INSPECTION. REFER MATH MODEL FOR PRECISE DIMENS.ONS. FOR ALL OTHER DIMENSIONS NOT SHOWN BUT REQUIRED FOR TOOL BUILD, SEE MATH MODEL FOR PRECISE TOOL PATH DATA.
2. THIS COMPONENT TO BE LOCD WITH LIGHNEDS BURS. SMOOTH TAPE WRAPPED USING 3 MIL TAPE HAVING NO SLITS OR EDGES.
3. PART IS SYMMETRICAL ABOUT CENTERLINE, EXCEPT AS NOTED.
4. REFERENCE SUMI OMO PART NUMBER 828: 9-010/0.
5. THIS PART IS NOT CONTROLLED FOR AUTOMATIC FEEDING.
6. 12 DIXIS.11 DLLIIII CORIINAL BRAND 0 B__ COATED ON ANY EXTERIOR SURFACE, PROTRAB Y VISIBLE AT FINAL ASSEMBLY. OPTICAL CONSTRUCTION TO BE "PED".

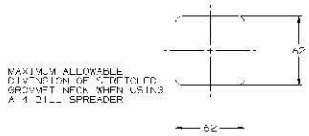

PART DRAWING

FORM 2X 29.822

UNLESS OTHERWISE SPECIFIED

1. ISSUED IN ACCORDANCE WITH ASME Y14.5M 1994
2. REFER TO THE CAD MODEL DRAWING FOR ALL DIMENSIONS, TOLERANCES AND NOTES.
3. DELPHI PROPRIETARY INFORMATION. THIS DRAWING IS THE PROPERTY OF DELPHI AND MAY NOT BE REPRODUCED OR DISCLOSED WITHOUT WRITTEN PERMISSION OF DELPHI.
4. DIMENSIONS ARE IN MILLIMETERS

MATERIAL
N-43002

DRAWING TITLE
SROK TAPE OV

DRAWING NUMBER
12066591

DELPHI
ELECTRICAL PRODUCTS ELECTRIC SYSTEMS
KOKOMO, IN

DR		DATE
DRAWN	HON BALWIN	21MY97
APPRV	P. ESTON	23MY97
APPRV	R. BRYAN	05JN97
APPRV		
APPRV		
APPRV		

SUBCONTRACT OF DELPHI AND BYSTOVE CONTRACT PER DELPHI 10/19/93

SIZE	SCALE	PAGE NO	SHEET	STA	REV	VER
A0	2:1	1 OF 1	NF	R	R5	

ANGLE PROJECTION

DO NOT SCALE

UNLESS OTHERWISE SPECIFIED